IF IN DOUBT ASK

NOTES:

1: 1 OFF 1/2" BSP (OR NPT) BODY VENT ON NON-DRIVE SIDE IF REQUIRED.

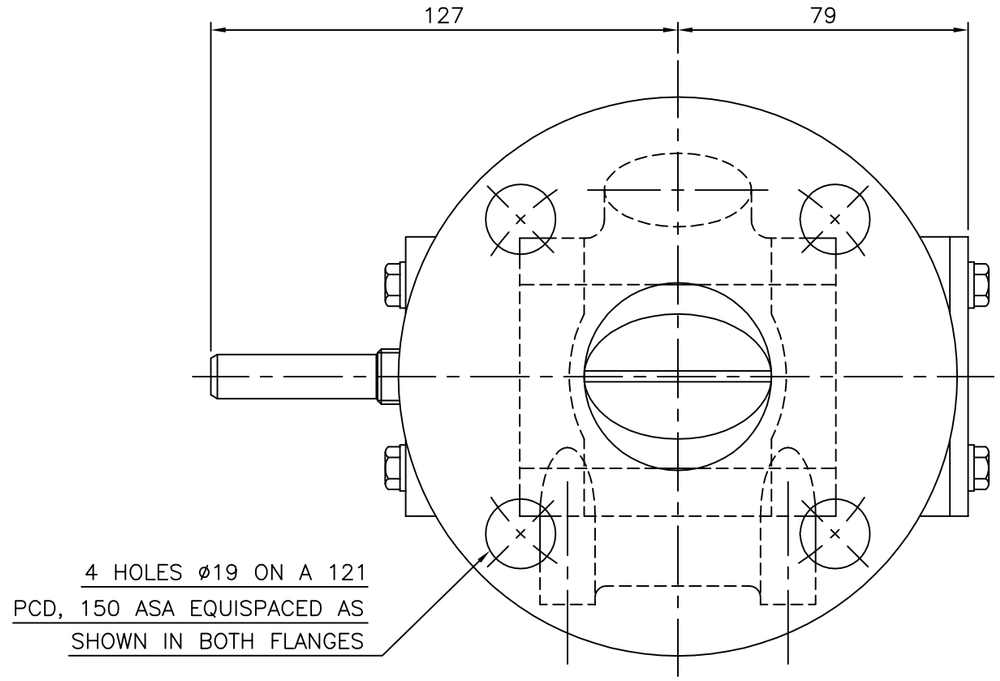

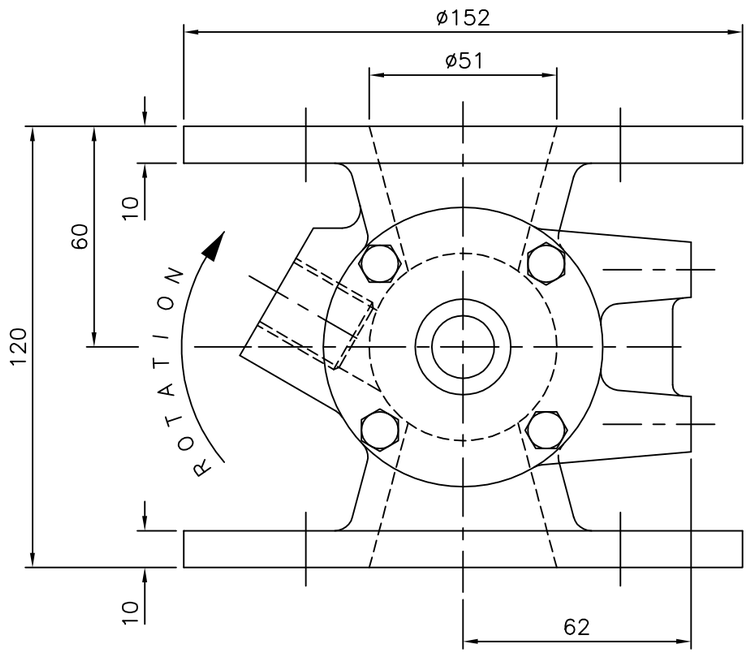

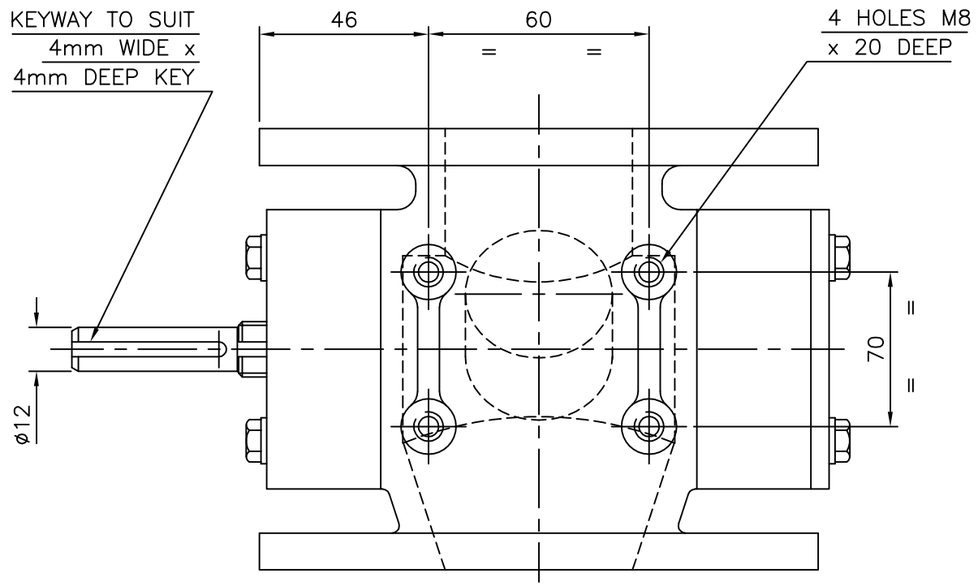

ITEM	PART No.	QTY	DESCRIPTION	MATL.	DWG REF

AMENDMENTS

ROTOLOK LTD

everything under control . . .

1 MILLENNIUM PLACE,
TIVERTON BUSINESS PARK,
TIVERTON, DEVON, EX16 6SB.
Tel: 01884 232232

This drawing is the property of ROTOLOK LTD and is loaned subject to the condition that it shall not be reproduced, copied, loaned or submitted to others without our consent.

CLIENT: STANDARD

TITLE: BARESHAFT ARRANGEMENT 50mm ROUND 150 ASA R.V.

SCALE: N.T.S.

DRAWING No.: 10726

DRAWN	CHECKED	APPROVED
M.J.V.K.K		
02/12/94		

ISSUE: A